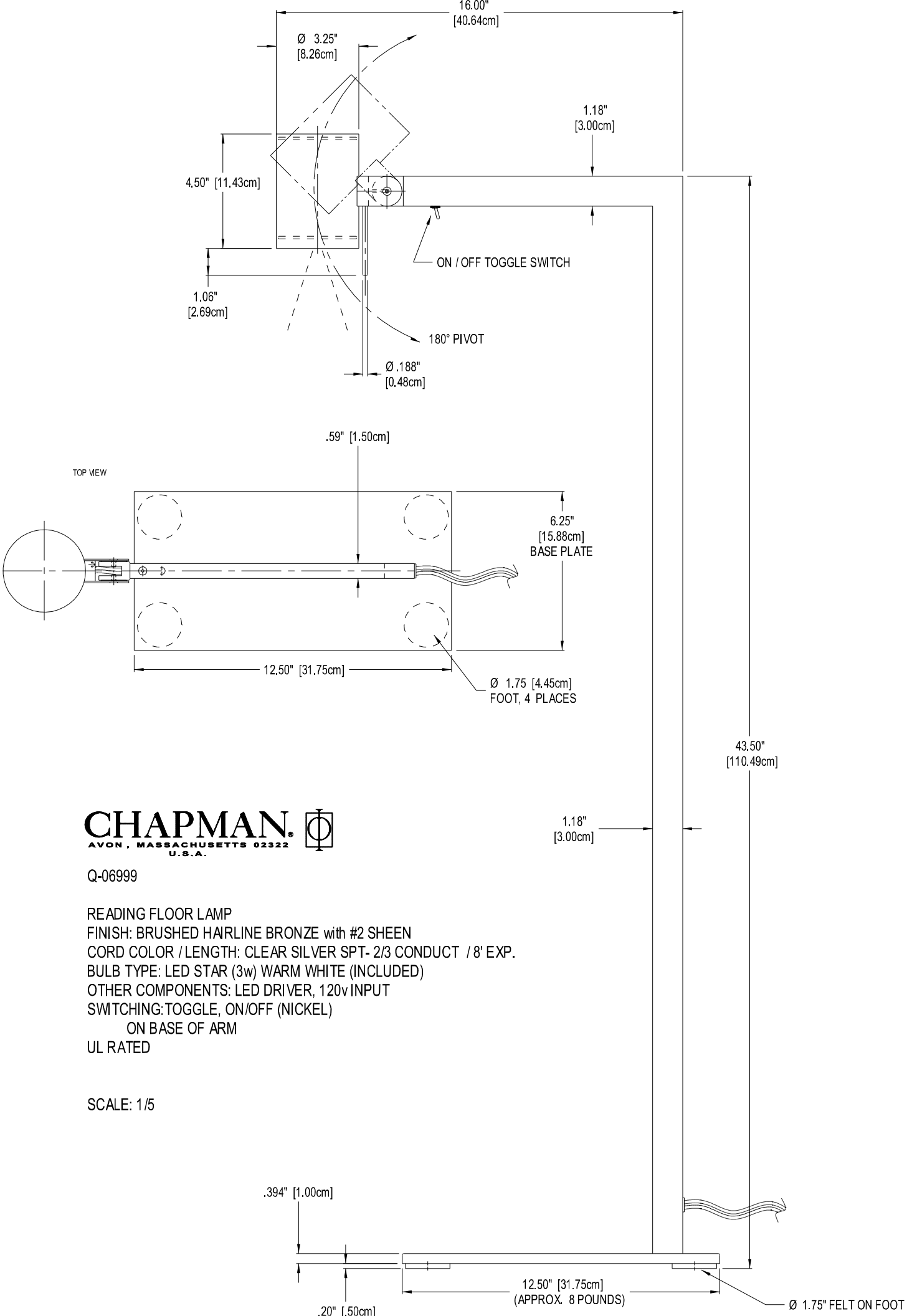

CHAPMAN®
AVON, MASSACHUSETTS 02322
U.S.A.

Q-06999

READING FLOOR LAMP
FINISH: BRUSHED HAIRLINE BRONZE with #2 SHEEN
CORD COLOR / LENGTH: CLEAR SILVER SPT- 2/3 CONDUCT / 8' EXP.
BULB TYPE: LED STAR (3w) WARM WHITE (INCLUDED)
OTHER COMPONENTS: LED DRIVER, 120v INPUT
SWITCHING: TOGGLE, ON/OFF (NICKEL)
ON BASE OF ARM
UL RATED

SCALE: 1/5